Conflict, variety (diversity) and performance of ad-hoc work teams

Abstract:
We use conflict theory to develop hypotheses about the effect of conflicts on the performance of “ad-hoc” work teams and the moderating influence of diversity conceptualized as variety. Despite their importance in various industries, such as airlines or medical services ad-hoc teams remain under-researched. By testing conflict theory in this particular context we contribute to extending and establishing the boundaries of conflict theory. We also provide a direct extension of conflict theory by developing and empirically testing a moderating influence of diversity conceptualized as variety. We test our hypotheses using 92 team-task observations in ad-hoc teams. Our findings show significant and partially unexpected findings with strong implications for both conflict theory and the management of ad-hoc work teams.

Introduction

While there exists a great amount of research into various facets of work teams, research on ad-hoc work teams is scarce. This is surprising as they are a frequently appearing phenomenon in many different industries and settings. Based on previous classifications of teams such as project- and action and performing teams as well as crews (Ginnett, 1993) we define ad-hoc work teams as small groups of people who are put together to deal with a particular, well-defined and short-term task. While there are similarities to project teams, ad-hoc teams have a considerably shorter life-span. Ad-hoc teams can exist from a few hours in the case of critical care teams in hospital teams to a couple of days in the case of air crew on long-haul flights. Members of ad-hoc teams may potentially be drawn from a common pool of employees (e.g. as in air crews), but the re-occurrence of a particular team composition is either very unlikely or very infrequent. As most research builds on a particular assumption of teams (e.g. development of group norms over time), these findings are not directly applicable to ad-hoc teams since they do not share common characteristics of ‘regular’ teams. Hence, research specifically geared towards ad-hoc teams is needed to understand the functioning of this particular type of team. In this study we contribute to closing this gap by investigating the effect that conflicts have on the performance of ad-hoc teams and the moderating effect of diversity.

The role of conflicts in teams has frequently been addressed in team research (e.g. De Dreu & Weingart, 2003) as conflicts pose a major challenge for effective team work (Jehn, Greer, Levine, & Szulanski, 2008; Medina, Munduate, Dorado, Inés, & José, 2005). The topic has

been investigated from various theoretical viewpoints (for an overview see De Wit, Greer, & Jehn, 2012), and conflict theory can be considered as one of the most comprehensive frameworks for analyzing the antecedents as well as consequences of conflict in teams. However, a number of relevant gaps still remain in the literature. First, as mentioned above, conflict research has mainly focused on traditional types of teams and its predictions have not yet been investigated with regard to ad-hoc teams. Second, past empirical investigations on the effect of different types of conflict on team performance remain inconclusive as support was found for a positive effect (Amason, 1996; Behfar, Mannix, Peterson, & Trochim, 2011; Jehn, 1995, 1997), a negative one (De Dreu & Weingart, 2003; Langfred, 2007; Vodosek, 2005) or no significant effect (De Wit, et al., 2012; Huang, 2012). These inconsistent empirical findings point towards the importance of moderators or contingency variables for the conflict-performance relationship (Jehn, et al., 2008; Joshi & Roh, 2009; Medina, et al., 2005; Puck, Neyer, & Dennerlein, 2010). Given the popularity of demographic diversity in research as well as its importance in practice (Horwitz & Horwitz, 2007; Van Knippenberg & Schippers, 2007) we focus on the moderating effect of demographic diversity, in specific on cultural, gender and age diversity. While diversity has mainly been investigated as antecedent of conflict, its moderating role on the relationship between conflict and performance has not been analyzed yet. We follow a call by Jehn and Bendersky (2003) to consider diversity as moderator of the conflict-performance relationship and to take a more detailed look on the specific type of diversity. We expect maximum diversity to either strengthen a positive effect or weaken a negative effect of conflict on performance since, based on the information processing perspective (Ancona & Caldwell, 1992; Gruenfeld, Mannix, Williams, & Neale, 1996; Mannix & Neale, 2005) and law of requisite variety (Ashby, 1956) diversity enhances problem-solving and group decision making quality due to a larger width of knowledge, expertise and perspectives. Thus, we apply the diversity conceptualization of variety according to Harrison and Klein's (2007) new taxonomy of team diversity. Further, by using conflict theory to explain the moderating influence of diversity on the effects of conflicts of ad-hoc team performance, we not only apply conflict theory to this under-researched context, but also extend conflict theory.

The remainder of the paper is structured as follows. We first draw on conflict theory, information processing theory diversity literature to develop hypotheses about the effect of conflict on ad-hoc team performance and information processing theory as well as diversity literature the moderating effect of demographic variety. We then present the research design

and our empirical data. The results of our analyses are presented and discussed in the ensuing section. Finally, we discuss the implications of our findings for theory and practice.

Theoretical framework and hypotheses

Conflicts are an inevitable part of teamwork (Jehn, 1995; Medina, et al., 2005) and represent an interactive process between team members (Pearson et al., 2002). Early research suggested conflict to be detrimental in general (Wall & Nolan, 1986), until researchers started to focus on the potentially positive effects of conflict (Jehn & Bendersky, 2003). This led to a "quest in finding positive conflict" (De Dreu, 2008, p. 6) and a view of conflict to be desirable and welcome and something to be stimulated (De Dreu, 2008). Most researchers based their work on the typology developed by Jehn (1995, 1997) differentiating between 1) relationship conflicts, which entail disagreements on personal issues (Jehn & Mannix, 2001) and are described as "emotion-based " (Pelled, 1996, p. 619), 2) task conflicts, which involve disagreements "about the content and outcomes of the task being performed", and 3) process conflicts, which can be described as "disagreements among group members about the logistics of task accomplishment, such as the delegation of tasks and responsibilities" (De Wit, et al., 2012, p. 360). Results provide evidence that whether conflict is good or bad for team performance seems to depend on the type of conflict, but results remain inconsistent (Amason, 1996; De Dreu, 2006; De Wit, et al., 2012; Jehn & Bendersky, 2003; Rispens, Greer, & Jehn, 2007). In the following we will revisit conflict theory based arguments for a positive/negative influence of different types of conflicts on team performance and, if necessary, modify them in order to take into account the specific characteristics of ad-hoc teams.

Task conflict

Task conflict is defined as "a condition in which group members disagree about task issues, including goals, key decision areas, procedures, and the appropriate choice of action" (Pelled, Eisenhardt, & Xin, 1999, p. 2). Task conflicts represent cognitive conflicts, are de-personalized and based on different ideas and viewpoints of the people involved (Jehn, 1994). Although previous research reported ambiguous findings regarding the effects of this type of conflict on the performance of teams, for the particular case of ad-hoc teams, we expect task conflict to have a negative effect on performance. While positive effects are explained by an enhanced level of knowledge about the task as a consequence of task conflict (Amason, 1996; Jehn, 1995), this argument presumes that teams work together long enough for this knowledge

to be made explicit, shared and absorbed by team members and then lead to better decisions enhancing performance. Such positive effects are thus less likely to occur in ad-hoc teams as the short-time span limits the sharing and discussion of ad-hoc team members' knowledge. Further, due to the interaction of group members caused by task conflict, team members have been argued to be able develop different ways of goal attainment, yet in ad-hoc teams such a development seems unlikely. Team members would be required to reanalyze their own position and to discuss the ideas of other members (Olson, Parayitam, & Bao, 2007), yet ad-hoc teams might not provide the time-frame for such a re-analysis. Hence, while for teams in general, task conflict might result in higher commitment and enhanced understanding of the task, for the particular case of ad-hoc teams we suggest that such positive effects are limited given the nature of ad-hoc teams.

Consequently, we expect a negative effect of task conflict on performance and follow the argumentation based on self-verification theory (Swann, Polzer, Seyle, & Ko, 2004) which suggests that team members cannot separate their viewpoints and opinions being challenged from "a negative assessment of their own abilities and competences" (De Wit, et al., 2012, p. 362), which might prove particularly eminent in the setting of ad-hoc teams. Also, according to an information-processing-perspective, any kind of conflict leads to a decline in the quality of decision-making as due to a cognitive overload the processing of information and the ability to make effective decisions is constrained (Carnevale & Probst, 1998; Jehn, et al., 2008). This is of particular importance in ad-hoc teams where there is only a limited amount of time available for task solution and any distraction from the task has thus a comparatively stronger negative effect on performance. A negative view of task conflict is confirmed by several studies, such as the meta-analysis by De Dreu and Weingart (2003) in which the authors also explain the negative effect of task conflict on performance by information-processing-theory.

Hypothesis 1: The higher the level of task conflict within a team, the lower the performance of the team.

Relationship conflict

Relational conflicts can be defined as "disagreements about personal issues" (De Wit, et al., 2012, p. 362) and have been characterized as "deriving from the emotional, affective aspects of the group's interpersonal relations" (Guetzkow & Gyr, 1954, p. 369). In the case of relational conflict the member's focus shifts to a personal, emotional level and thus impedes

the members in both achieving their objectives and their decision-making ability (Jehn, 1995; Jehn, Northcraft, & Neale, 1999). Relational conflict "limits the information processing ability of the group because group members spend their time and energy focusing on each other rather than on the group's task-related problems" (De Dreu & Weingart, 2003, p. 742) which has a negative effect on team performance. The same presumably applies to ad-hoc teams. Pelled (1996) stated three reasons for this negative influence of relational conflicts. First, they lead to a misjudgement of information provided by other members. This is even more of a problem for ad-hoc teams as there is little time to correct/rectify this misjudgment in subsequent interactions. Second, member's ideas, suggestions and opinions during relational conflict, will be blocked. Third, time is spent on dealing with existing relational conflicts instead of pursuing the objective. Hence, just as relational conflicts are expected to have negative effects on team performance (Jehn & Mannix, 2001), we suggest that this is the same for ad-hoc teams. The negative effect of relational conflicts is also supported by many empirical studies (Behfar, et al., 2011; Greer, Jehn, & Mannix, 2008; Rispens, et al., 2007). Therefore, based on the information-processing perspective (Carnevale & Probst, 1998) and self-verification theory (Swann, et al., 2004) we derive the following hypothesis:

Hypothesis 2: The higher the level of relationship conflict within the team, the lower the performance of the team.

Process conflict

According to Jehn (1997, p. 540) process conflicts are "about how task accomplishment should proceed in the work unit, who's responsible for what, and how things should be delegated". In line with past research process conflict was found to be a distinct type of conflict showing own unique dynamics (Behfar, et al., 2011). Recent research has suggested that process conflict might have a positive effect in the beginning of a group project, since at that point a team might benefit from examining different ways to complete a task (Goncalo, Polman, & Maslach, 2010), yet we believe that in the case of ad-hoc teams process conflict will have a negative effect on performance as similarly as in the event of task- and relationship conflict team members will not be able to benefit from any potentially positive effects due the limited time period they are working together. Jehn (1997) found support for her expectation that teams faced with intense process conflicts perform worse than teams without such conflict. The negative findings of process conflict are further supported by several other studies (Greer, Caruso, & Jehn, 2011; Jehn & Mannix, 2001; Passos & Caetano,

2005). Therefore, and again also based on an information-processing perspective (Carnevale & Probst, 1998) and self-verification theory (Swann, et al., 2004) we expect process conflict to have an negative impact on the performance of ad-hoc teams.

Hypothesis 3: The higher the level of process conflict within a team, the lower the performance of the team.

The moderating effect of diversity

Due to the heterogeneity in previous findings, conflict theory (De Dreu, 2008; De Dreu & Weingart, 2003; Jehn & Bendersky, 2003) emphasis the importance of applying a contingency approach to increase the understanding of the effects intragroup conflict on group outcomes (De Wit, et al., 2012). Until recently, many studies analyzing performance of teams neglected context-based and/or moderating factors (see, e.g., Jackson, Joshi, & Erhardt, 2003; Van Knippenberg & Schippers, 2007) even though numerous researchers have called for the inclusion of context-variables (S. Cohen & Bailey, 1997; Jehn & Bendersky, 2003). The relevance of such factors for team research has so far only been tested in a few studies (see Joshi & Roh, 2009, for a meta-analytic review), providing strong empirical support for incorporating contextual moderators in the analysis.

Jehn and Bendersky (2003) specifically stressed the importance of investigating the moderating effect of diversity since it might affect interactions among group members and as such is likely to modify the extent to which conflict is negatively associated with performance. Diversity can be defined as non-homogenous distribution of individual attributes among team members (Jackson, et al., 2003). Therefore, diversely composed teams are characterized by individuals with different attributes, contributing various values, norms, and behavior patterns to the team (Govindarajan & Gupta, 2001). According to Harrison and Klein (2007) cultural-, gender as well as age diversity, can be conceptualized as variety, since these characteristics are proposed to broaden the spectrum of perspectives and ideas in a team. Therefore, based on the information processing perspective (Ancona & Caldwell, 1992; Gruenfeld, et al., 1996; Mannix & Neale, 2005) and law of requisite variety (Ashby, 1956) diversity is supposed to help team members in dealing with conflict, or more specifically, in problem-solving and will help team members to increase group decision making quality, because team members can draw from a wider pool of knowledge, expertise and perspectives. Therefore, while on the one hand, based on information-processing conflict can harm

effective decision making and processing of information due to a cognitive overload (Carnevale & Probst, 1998), on the other hand because of high diversity within a team it will such a negative effect will be decreased.

Hypothesis 4: High diversity conceptualized as variety within the team weakens a negative effect of each type of conflict on team performance.

3. Methods

3.1 Sample and task

Primary data was gathered using a quasi-experimental laboratory setting with MBA students from the business school of a large university. Research participants were 268 students, 169 (63%) of them female and 99 male (37%) who participated in exchange for course credit. Mean age of all participants was 24 with a low standard deviation (s.d. = 2.01). The number of different national cultures within the teams varied between one and five.

We tested our model in the context of two short-term tasks, both different in nature but similar in their demand for a relatively high level of interdependence, given that team members had to make joint decisions and coordinate their solution. The first task was a combined creative-generating and decision-making task (McGrath, 1984), which encompassed the development of a public relations strategy for a university department applying a specified amount of limited monetary resources. Both subtasks of the first task require a high level of intra-team cooperation and joint decision making about both the creative part as well as the decision part. The second task was designed as a combined cognitive-conflict and decision-choice task (McGrath, 1984). Within this task, a possible reorganization of studies according to the Bologna Accords needed to be discussed, and a decision had to be taken. Again, both subtasks required intense cooperation and interaction as well as joint decision making between the students. Groups were expected to develop a short, maximum 3-slide-presentation within time for each task that presents their “solution” and their argumentation. An observer was assigned to each group to ensure that all presentations were finalized in time and maximum of 20 minutes working-time was assigned to each task, putting additional pressure on the candidates. One half of the teams had to solve task 1 before working on task 2. The other half got the tasks in reverse order to avoid effects stemming from learning and group work experience.

Procedures and analysis

All students participating in the study had to hand in a CV two weeks before the study. Information from the CV was used in order to split the students in heterogeneous teams. After arriving, students were welcomed by the head of the research team who encouraged and motivated the students to actively participate. He did not reveal the real intention of the survey, but highlighted that the students would be observed during the teamwork period and that participation contributed 25 percent to their grading. All teams, irrespectively of their heterogeneity or size, were treated equally during this time period and were neither coached nor in any other way supported by the observer or other members of the research team. After 20 minutes, the observer collected the presentations of the teams and provided each participant with a questionnaire to assess the intra-team conflict level. After collecting the questionnaires, the teams were given a 10 minute break but had to remain seated at their tables. Afterwards, the procedure was repeated with the second task and the same questionnaires were distributed again after the task was finished. After the questionnaires were collected, every team had to present their results at the plenum in front of the other participants. Based on a standardized questionnaire the performance of each team was evaluated by all participants, thus using a peer review mechanism. This questionnaire contained six items developed for this study and was measured on 7-point Likert-type scale. As there is no general consensus in the literature about the dimensions of output-quality, we integrated existing approaches and developed a measure that included aspects of the uniqueness of the results, the quantity of the results, the quality of the results, overall performance, convincingness (Ancona & Caldwell, 1992; Stewart & Barrick, 2000), and creativity of the results (Stewart, 2006; Woodman, Sawyer, & Griffin, 1993). Specifically, the following questions were used: “How do you assess the team with regard to the uniqueness of their solution or argumentation?”, “How do you assess the number of arguments of the team they brought forward within this task?”, “How do you assess the quality of arguments the team suggested within this task?”, “How do you assess the overall performance the team has achieved within the task?”, “Has the solution of the team convinced you?”, “How do you assess the creative performance of the team within the task?” All teams were evaluated by all members in the study except for the members of the presenting team, leading to an average of 262 responses for each team’s performance (variation in no. of responses caused by difference team sizes). Cronbachs $\alpha = 0.89$ was high so we combined all items into a single measure of team performance.

Conflicts were measured using Jehn's (1995, 1997) items of intra-group conflicts. Cronbach's alpha was computed for every conflict type in the first task, revealing an alpha of 0.79 for task conflict, 0.65 for relational conflict, and 0.61 for process conflict. Even though results are slightly below the results of previous studies, they can be considered satisfactory (Nunnally, 1970). Coefficient alphas for the second task were slightly higher with 0.86 for task conflict, 0.71 for relational conflict and 0.67 for process conflict. Again, coefficients can be considered satisfactory (Nunnally, 1970).

Based on Harrison and Klein (2007) we conceptualized cultural, gender and age as variety since it can be argued that each of these characteristics represents "different caches of knowledge" (Harrison & Klein, 2007, p. 1209). In line with the conceptualization of variety we applied Blau's formula (Blau, 1977).

We incorporated team size as a control as it plays a very important role in team research. With an increasing number of team members, "the psychological distance between individuals can increase"(Pearce & Herbik, 2004, p. 297), what, in consequence may have effects on team performance. Further, we integrated task type as a control in the analysis since the students had to work on two different task types both of which had to be solved.
Figure 1 illustrats our research model.
== insert figure one about here ==

Results and discussion
The collected data was evaluated and analysed with Stata 13.
Before analyzing the results in depth, we calculated a correlation matrix. Table 1 presents the arithmetic means and standard deviations as well as the bivariate correlations of the model.
== insert table 1 about here ==
To face the issue of multicollinearity and to ensure the interpretation of results we split the research model in three parts and conducted a single analysis for each conflict dimension. This procedure allowed us to stick to the theory-based differentiation of conflict types (Amason, 1996; De Dreu & Weingart, 2003; Jehn, 1997; Jehn & Mannix, 2001; Jehn, et al., 1999; Pelled, 1996) and at the same time to avoid bias caused by multicollinearity.
To facilitate interpretation, to decrease still existing multicollinearity, and to achieve a better comparability between the variables, we standardized the data (J. Cohen, Cohen, West, & Aiken, 2013). To analyze our data, we first used moderated multiple hierarchical regression

analysis (Aguinis, 1995), as applied in numerous earlier studies analyzing similar relationships (e.g., Jehn & Mannix, 2001; Jehn, et al., 1999). In step one, the control varies, the independent as well as the moderating variable were entered in the research model. In a second step we entered the interaction effects, representing the product of independent variable and moderating variable. To address the multi-level nature of our data we clustered the analyses according to teams. The results of the regression models are presented in Table 2 to 4.

== insert table 2 about here ==

Based on an information processing perspective (Carnevale & Probst, 1998) as well as self-verification theory (Swann, et al., 2004) we expected all types of conflict to have a negative impact on team performance in the case of ad-hoc teams. As can be seen from the regression analysis, neither task conflict nor process conflict had a significant effect on performance. Hence, hypothesis 1 and 3 were not supported by our data. Yet, a few other studies also found insignificant direct effects of task conflict (Cooper & Watson, 2011; De Jong & Elfring, 2010; Huang, 2012; Shaw, et al., 2011) or process conflict on performance (Jehn, et al., 2008). As a potential explanation, it might be assumed that the "understanding of topics such as delegation and allocation of resources" (Greer, et al., 2008, p. 2) among the team members were quite different, since the teams worked in this composition for the first time on the tasks. Therefore, structures of roles were not existent at the start. Disagreements about "how to do it" impair the "decision-making effectiveness" (Passos & Caetano, 2005, p. 241) and consequently diminish the success of a team. Jehn and Mannix (2001) predicted a U-shaped progress of process conflicts. But "the results show that process conflict for high-performing groups increases significantly from the early to the middle to the late time block, rather than (…) hypothesized" (Jehn & Mannix, 2001, p. 245). The time aspect may thus play a critical role in our study. Caused by the clearly communicated time limit for working on the task and the first-time group composition as well, team members may have avoided process as within their groups. Individuals, who would aim ambitious roles within team structures over time, may have accepted a subordinated role with respect to the group task and avoided position battles. Similarly the same logic might apply to task conflict. Rather than extensively elaborating and discussing different alternatives, team members focused on achieving a quick result. They all may thus have concentrated on generating team output, and process and task conflict did not have a critical impact or significant effect as a consequence.

Opposite to the prediction, in the case of relationship conflict team members achieved higher performance (.12; $p < .05$ and .09; $p < .05$). Hypothesis 2, thus, has to be rejected. This result is surprising. Contrary to a large number of existing studies (Behfar, et al., 2011; De Dreu & Weingart, 2003; Rispens, et al., 2007), our findings support the notion that relational conflicts enhance performance. Time of cooperation might be a potential explanation. In our study, teams were strongly restricted by the given time limit of 20 minutes for processing their tasks. It is, thus, likely that the team members perceived time pressure. Each team had to deliver output before the time limit was expired. The interpretation of Jehn (1995, p. 276)that "members involved in the conflicts choose to avoid working with those whom they experience conflict with" thus seems not to be transferable to our study. Due to the time pressure it might not have been possible for team members to evade others in consequence of relational conflicts. Team members rather may have overlooked the intensive conflict within these short-term tasks and contributed to the group's success due to the time constraint. Although the results in the study of Jehn and Mannix (2001) are different, a closer consideration of the temporal conflict occurrence thus leaves room for further interpretation. In their study, relational conflicts are split in three periods whereas in the first period conflicts are consistently lower and increase over time. Applied to our study and with the knowledge of working together just once and having to deliver output within a limited time period, the team members may have concentrated more on output rather than on the escalation of conflict, causing beneficial effects of relational conflict on team performance.

In hypothesis 4 we predicted, based on an information processing perspective (Ancona & Caldwell, 1992; Gruenfeld, et al., 1996; Mannix & Neale, 2005) and law of requisite variety (Ashby, 1956) that diversity might provide cognitive ability or resources to effectively handle conflict, i.e. have a positive impact and, therefore, to weaken a negative effect of any type of conflict on performance. However, we found the moderating effect of gender- as well as national diversity to weaken the positive impact of relationship conflict on performance. In specific, we found a negative moderating effect of gender diversity on the relationship of task conflict and performance (-.08; $p < .05$) as well as relationship conflict and performance (-.15; $p < .05$). Further, we found a negative moderating effect of cultural diversity on the relationship between relationship conflict and performance (-.10, $p > .05$). Theories and perspectives that support a negative view are social categorization and similarity-attraction (Williams & O'Reilly, 1998), however, these theoretical foundations are consistent with the conceptualization of separation. We operationalized diversity as index consistent with variety (Harrison & Klein, 2007) as sex and culture are categorical variables and therefore it would

not have been appropriate to operationalize them with an index associated with separation (Bell, Villado, Lukasik, Belau, & Briggs, 2011; Harrison & Klein, 2007). Bell et al. (2011, p. 25) who found race and sex variety to negatively affect performance pointed out "diversity […] may have been generally limited to more moderate levels of variety as the upper bound. It is unlikely that most field studies included several teams wherein each member was from a different race. If this was the case, then the minimum and moderate levels of variety diversity may have mimicked the separation conceptualization."

Implications and limitations

Our results provide implications for two different streams in the literature: the conflict literature and the diversity literature. For the conflict literature, a first implication is based on the fact that neither task nor process conflicts did have a significant effect in our analysis. This finding provides an interesting alley for future research. On the one hand, future research should try to provide further empirical evidence for the direct outcome relevance of task- as well as process conflicts in teams. As our study focused on short term tasks, it might be especially fruitful to test this within long-term tasks. On the other hand, effects of task and process conflicts might depend on specific contextual conditions, also an interesting direction for future research. Surprisingly, we found positive effects of relational conflict on team performance. We might have, in other words, found, one of the few and specific circumstances, under which this type of conflict has a positive impact on performance. In the field of diversity research, results of our study provide strong evidence for the existence of post-conflict effects of diversity. We support the call for future researchers by Bell et al. (2011, p. 25) to "continue to explore the effects of sampling and range restriction (e.g., Allen, Stanley, Williams, & Ross, 2007) on the different conceptualizations, as well as the general adequacy of the diversity indices used to represent specific diversity conceptualizations.".

Besides the stated implications for practice and further research, we also have to consider the limitations of our study. First, we investigated a relatively small sample of 92 task observations. Further studies should validate the results with a larger sample. This fact restricts the predictive power of our results to this specific context. There is need for further examinations with longer-term tasks which would entail a longer cooperation of team members. Hence, practical implications could be more delineated and deliver a more comprehensive understanding of team research. Third, in our study diversity is limited to demographical attributes. Studies, which do not limit their focus on "immutable

characteristic[s]" (Pelled, et al., 1999, p. 1) of diversity, but undertake more in-depth investigations of this contingency factor could provide important findings. Fourth, since the different types of conflict were the only variables we had individual level data on, and performance as well as diversity were measured on the team level, we could not conduct are more sophisticated multi-level analysis.

Conclusion

This study investigates the relationship between intrateam conflict and team performance in ad-hoc teams and the moderating effect of diversity on this relationship. Task and process conflict both did not have a significant effect on team performance, however, relationship was surprisingly found to have positive effect on the performance of ad-hoc teams. In case of relationship conflict and team performance we also found a moderating effect of cultural and gender diversity which highlights the importance of effective diversity management, specifically in the case of ad-hoc teams and conflict, and of including moderating variables into research models.

Aguinis, H. (1995). Statistical power with moderated multiple regression in management research. *Journal of Management, 21*, 1141-1158.

Allen, N. J., Stanley, D. J., Williams, H. M., & Ross, S. J. (2007). Assessing the impact of nonresponse on work group diversity effects. *Organizational Research Methods, 10*, 262-286.

Amason, A. (1996). Distinguishing Effects of Functional and Dysfunctional Conflict on Strategic Decision Making: Resolving a Paradox for Top Management Teams. *Academic Management Journal, 39*, 123-148.

Ancona, D. G. & Caldwell, D. F. (1992). Demography and design: Predictors of new product team performance. *Organization Science, 3*, 321-341.

Ashby, W. R. (1956). *An introduction to cybernetics*. New York: Wiley.

Behfar, K. J., Mannix, E. A., Peterson, R. S., & Trochim, W. M. (2011). Conflict in Small Groups: The Meaning and Consequences of Process Conflict. *Small Group Research, 42*, 127-176.

Bell, S. T., Villado, A. J., Lukasik, M. A., Belau, L., & Briggs, A. L. (2011). Getting Specific about Demographic Diversity Variable and Team Performance Relationships: A Meta-Analysis. *Journal of Management, 37*, 709-743.

Blau, P. M. (1977). *Inequality and heterogeneity: A primitive theory of social structure*: Free Press New York.

Carnevale, P. J. & Probst, T. M. (1998). Social Values and Social Conflict in Creative Problem Solving and Categorization. *Journal of Personality and Social Psychology, 74*, 1300-1309.

Cohen, J., Cohen, P., West, S., & Aiken, L. (2013). *Applied multiple regression/correlation analysis for the behavioral sciences*: Routledge.

Cohen, S. & Bailey, D. (1997). What makes teams work: Group effectiveness research from the shop floor to the executive suite. *Journal of Management, 23*, 239-290.

Cooper, D. & Watson, W. (2011). Conflict and performance in US and Mexican learning teams. *Cross Cultural Management, 18*, 426-442.

De Dreu, C. K. (2006). When too little or too much hurts: Evidence for a curvilinear relationship between task conflict and innovation in teams. *Journal of Management, 32*, 83-107.

De Dreu, C. K. (2008). The virtue and vice of workplace conflict: food for (pessimistic) thought. *Journal of Organizational Behavior, 29*, 5-18.

De Dreu, C. K. & Weingart, L. R. (2003). Task versus relationship conflict, team performance, and team member satisfaction: A meta-analysis. *Journal of Applied Psychology, 88*, 741-749.

De Jong, B. A. & Elfring, T. O. M. (2010). HOW DOES TRUST AFFECT THE PERFORMANCE OF ONGOING TEAMS? THE MEDIATING ROLE OF REFLEXIVITY, MONITORING, AND EFFORT. *Academy of Management Journal, 53*, 535-549.

De Wit, F. R. C., Greer, L. L., & Jehn, K. A. (2012). The Paradox of Intragroup Conflict: A Meta-Analysis. *Journal of Applied Psychology, 97*, 360-390.

Ginnett, R. C. (1993). Crews as groups: Their formation and their leadership. In *Cockpit resource management* (pp. 71-98). Orlando, FL: Academic Press.

Goncalo, J. A., Polman, E., & Maslach, C. (2010). Can confidence come too soon? Collective efficacy, conflict and group performance over time. *Organizational Behavior and Human Decision Processes, 113*, 13-24.

Govindarajan, V. & Gupta, A. K. (2001). Building an effective global business team. *MIT Sloan Management Review, 42*, 63-71.

Greer, L. L., Caruso, H. M., & Jehn, K. A. (2011). The bigger they are, the harder they fall: Linking team power, team conflict, and performance. *Organizational Behavior & Human Decision Processes, 116*, 116-128.

Greer, L. L., Jehn, K. A., & Mannix, E. A. (2008). Conflict Transformation: A Longitudinal Investigation of the Relationships Between Different Types of Intragroup Conflict and the Moderating Role of Conflict Resolution. *Small Group Research, 39*, 278-302.

Gruenfeld, D. H., Mannix, E. A., Williams, K. Y., & Neale, M. A. (1996). Group composition and decision making: How member familiarity and information distribution affect process and performance. *Organizational Behavior and Human Decision Processes, 67*, 1-15.

Guetzkow, H. & Gyr, J. (1954). An analysis of conflict in decision-making groups. *Human Relations, 7*, 367-382.

Harrison, D. A. & Klein, K. J. (2007). What's the difference? Diversity constructs as separation, variety, or disparity in organizations. *Academy of Management Review, 32*, 1199-1228.

Horwitz, S. K. & Horwitz, I. B. (2007). The effects of team diversity on team outcomes: A meta-analytic review of team demography. *Journal of Management, 33*, 987-1015.

Huang, J.-C. (2012). The relationship between conflict and team performance in Taiwan: the moderating effect of goal orientation. *The International Journal of Human Resource Management, 23*, 2126.

Jackson, S. E., Joshi, A., & Erhardt, N. L. (2003). Recent Research on Team and Organizational Diversity: SWOT Analysis and Implications. *Journal of Management, 29*, 801.

Jehn, K. A. (1994). Enhancing effectiveness: an investigation of the advantages and disadvantages of value-based intragroup conflict. *International Journal of Conflict Management, 5*, 223-238.

Jehn, K. A. (1995). A multimethod examination of the benefits and detriments of intragroup conflict. *Administrative Science Quarterly, 40*, 256-256.

Jehn, K. A. (1997). A qualitative analysis of conflict types and dimensions in organizational groups. *Administrative Science Quarterly, 42*, 530-557.

Jehn, K. A. & Bendersky, C. (2003). Intragroup conflict in organizations: a contingency perspective on the conflict-outcome relationship. *Research in Organizational Behavior, 25*, 187-243.

Jehn, K. A., Greer, L., Levine, S., & Szulanski, G. (2008). The Effects of Conflict Types, Dimensions, and Emergent States on Group Outcomes. *Group Decision and Negotiation, 17*, 465-495.

Jehn, K. A. & Mannix, E. A. (2001). The dynamic nature of conflict: A longitudinal study of intragroup conflict and group performance. *Academy of Management Journal, 44*, 238-251.

Jehn, K. A., Northcraft, G. B., & Neale, M. A. (1999). Why Differences Make a Difference: A Field Study of Diversity, Conflict, and Performance in Workgroups. *Administrative Science Quarterly, 44*, 741-763.

Joshi, A. & Roh, H. (2009). The role of context in work team diversity research: A meta-analytic review. *Academy of Management Journal, 52*, 599-627.

Langfred, C. W. (2007). The downside of self-management: a longitudinal study of the effects of conflict on trust, autonomy, and task interdependence in self-managing teams. *Academy of Management Journal, 50*, 885-900.

Mannix, E. & Neale, M. A. (2005). What Differences Make a Difference? The Promise and Reality of Diverse Teams in Organizations. *Psychological Science in the Public Interest, 6*, 31-55.

McGrath, J. E. (1984). *Groups: Interaction and performance* (Vol. 14): Prentice-Hall Englewood Cliffs, NJ.

Medina, F. J., Munduate, L., Dorado, M. A., Inés, M., & José, M. G. (2005). Types of intragroup conflict and affective reactions. *Journal of Managerial Psychology, 20*, 219-230.

Nunnally, J. C. (1970). *Introduction to psychological measurement*. New York, NY, US: McGraw-Hill.

Olson, B. J., Parayitam, S., & Bao, Y. (2007). Strategic decision making: The effects of cognitive diversity, conflict, and trust on decision outcomes. *Journal of Management, 33*, 196-222.

Passos, A. & Caetano, A. (2005). Exploring the effects of intragroup conflict and past performance feedback on team effectiveness. *Journal of Managerial Psychology, 20*, 231-244.

Pearce, C. L. & Herbik, P. A. (2004). Citizenship Behavior at the Team Level of Analysis: The Effects of Team Leadership, Team Commitment, Perceived Team Support, and Team Size. *The Journal of Social Psychology, 144*, 293-310.

Pelled, L. H. (1996). Demographic Diversity, Conflict, and Work Group Outcomes: An Intervening Process Theory. *Organization Science, 7*, 615-631.

Pelled, L. H., Eisenhardt, K. M., & Xin, K. R. (1999). Exploring the Black Box: An Analysis of Work Group Diversity, Conflict, and Performance. *Administrative Science Quarterly, 44*, 1-28.
Puck, J. F., Neyer, A.-K., & Dennerlein, T. (2010). Diversity and conflict in teams: a contingency perspective. *European Journal of International Management, 4*, 417-439.
Rispens, S., Greer, L. L., & Jehn, K. A. (2007). It could be worse: A study on the alleviating roles of trust and connectedness in intragroup conflicts. *International Journal of Conflict Management, 18*, 325-344.
Shaw, J. D., Zhu, J., Duffy, M. K., Scott, K. L., Shih, H.-A., & Susanto, E. (2011). A Contingency Model of Conflict and Team Effectiveness. *Journal of Applied Psychology, 96*, 391-400.
Stewart, G. (2006). A meta-analytic review of relationships between team design features and team performance. *Journal of Management, 32*, 29-55.
Stewart, G. & Barrick, M. (2000). Team structure and performance: assessing the mediating role of intrateam process and the moderating role of task type. *Academy of Management Journal, 43*, 135-148.
Swann, W. B., Polzer, J. T., Seyle, D. C., & Ko, S. J. (2004). Finding value in diversity: verification of personal and social self-views in diverse groups. *Academy of Management Review, 29*, 9-27.
Van Knippenberg, D. & Schippers, M. C. (2007). Work group diversity. *Annu. Rev. Psychol., 58*, 515-541.
Vodosek, M. (2005). Cultural diversity, intragroup conflict, and group outcomes: evidence for a mediated relationship. In *Academy of Management Proceedings* (Vol. 2005, pp. D1-D6): Academy of Management.
Wall, V. D. & Nolan, L. L. (1986). Perceptions of Inequity, Satisfaction, and Conflict in Task-Oriented Groups. *Human Relations, 39*, 1033-1053.
Williams, K. Y. & O'Reilly, C. A. (1998). Demography and diversity in organizations: A review of 40 years of research. *Research in Organizational Behavior, 20*, 77-140.
Woodman, R. W., Sawyer, J. E., & Griffin, R. W. (1993). Toward a theory of organizational creativity. *Academy of Management Review, 18*, 293-321.

Figure 1 Research model

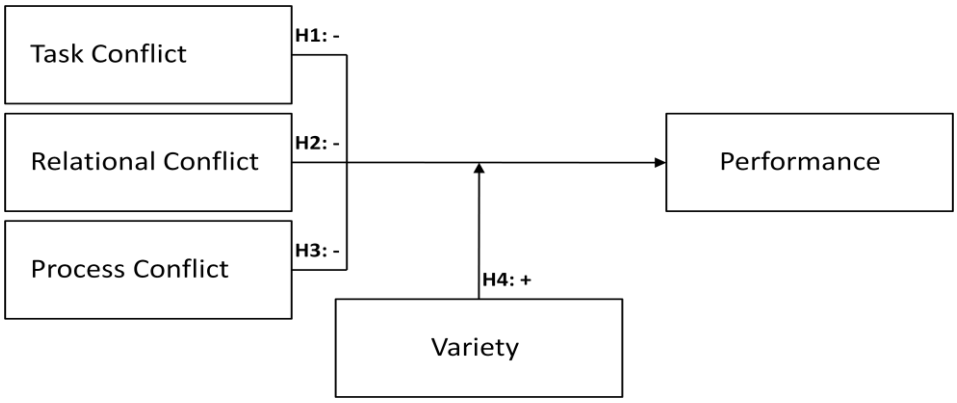

Table 1 Means, standard deviations and correlations

	Mean	**SD**	**1**	**2**	**3**	**4**	**5**	**6**	**7**
1. Performance		0,81							
2. Task Conflict	1,90	0,98	-.006						
3. Relational Conflict	2,33	1,12	.015	.606**					
4. Process Conflict	2,40	1,21	-.142**	.498**	.471**				
5. Cultural Diversity	0,27	0,23	-.118**	-.018	-.002	-.027			
6. Gender Diversity	0,39	0,13	.00	-.006	.095*	-.064	-.054		
7. Age Diversity	0,76	0,08	.033	-.084	-.044	-.095*	.011	.085	
8. Task Type	0,5	0,5	.033	.051	.012	.045	.00	.00	.00
9. Team Size	6,01	1,045	-.01	-.043	-.069	-.086*	-.196**	.168**	.411**
N = 536									

Table 2 Regression analysis for the effect of task conflict on performance

Step 1 Controls		
Team Size	.13†	.13†
Task Type	.15	.15
Step 2 Main effects		
Task Conflict	.06†	.05
Cultural diversity	.15†	.15†
Gender diversity	.21†	.21†
Age diversity	-.27*	-.26*
Step 3 Interaction effects		
Culture x TC		-.02
Gender x TC		-.08*
Age x TC		.00
R^2	15,92	16,69
†*p* < ,1; **p* < ,05; ***p* < ,01; ****p* < ,001 82 clusters in teams		

Table 3 Regression analysis for the effect of relationship conflict on performance

Step 1 Controls		
Team Size	.14*	.13†
Task Type	.13	.14
Step 2 Main effects		
Relationship Conflict	.12*	.09*
Cultural diversity	.14†	.16*
Gender diversity	.20†	.17†
Age diversity	-.27*	-.24*
Step 3 Interaction effects		
Culture x TC		-.10*
Gender x TC		-.15*
Age x TC		.05
R^2	17,02	20,21
†*p* < ,1; **p* < ,05; ***p* < ,01; ****p* < ,001 82 clusters in teams		

Table 4 Regression analysis for the effect of process conflict on performance

Step 1 Controls		
Team Size	.13†	.12†
Task Type	.14	.14
Step 2 Main effects		
Process Conflict	.02	.02
Cultural diversity	.15†	.14†
Gender diversity	.21†	.12†
Age diversity	-.27*	-.27*
Step 3 Interaction effects		
Culture x TC		-.02
Gender x TC		-.01
Age x TC		.02
R^2	15,52	15,67
†*p* < ,1; **p* < ,05; ***p* < ,01; ****p* < ,001 82 clusters in teams		